EMH metering
GmbH & Co. KG

Neu-Galliner Weg 1 • 19258 Gallin
GERMANY

Tel. +49 38851 326-0
Fax +49 38851 326-1129

Email info@emh-metering.com
Web www.emh-metering.com

Tel. +49 38851 326-1930 (Technical Support)
Email support@emh-metering.com

MIZ
Mini industrial meter

EN Instructions for use

Scope of delivery

Please check that the contents of the packing box are complete before starting the installation and start-up procedure.

- 1 MIZ device
- 1 Instructions for use

If the contents are incomplete or damaged, please contact your supplier.
Store, use and transport the device in such a way that it is protected against moisture, dirt and damage.

Important information

These instructions list all the different device versions. Some of the features described herein may not be applicable to your particular device.

Document approved by notified body 1948
Issue date: 09 August 2021; subject to technical changes.

MIZ-BIA-E-1.83

Target audience

These instructions are intended for technicians who are responsible for the installation, connection and servicing of the devices. The device may only be installed and started up by qualified electricians in accordance with the generally accepted technology standards and, where applicable, the definitive regulations governing the erection of communication equipment and terminal devices.

Intended use

The meter is intended to be used solely for the measurement of electrical energy indoors, and it must not be operated outside the specified technical data (see meter labelling).

Maintenance and warranty instructions

The device requires zero maintenance. It is not permitted to make any repairs in the event of any damage (e.g. due to transport or storage).

If the device is opened, the warranty and the Declaration of Conformity will be rendered null and void. The same applies where a defect is caused by external factors (e.g. lightning, water, fire, extreme temperatures and weather conditions), or by improper or careless use or handling.

Care and disposal information

⚠ DANGER!

Risk of fatal injury in case of contact with live parts!

Before the housing of the meter is cleaned, all conductors that the meter is connected to must be de-energised.

Use a dry cloth to clean the device housing. Do not use any chemical cleaning agents!

The following table names the components and how they are to be treated at the end of their life cycle.

Components	Waste collection and disposal
Printed circuit boards	**Electronic waste:** Dispose of such waste in accordance with the local regulations.
LEDs, LC display	**Hazardous waste:** Dispose of such waste in accordance with the local regulations.
Metal parts	**Recyclable material:** Sort such material and send it for recycling.
Plastic parts	Send sorted plastic parts to a recycling plant (regranulation) or, where applicable, to a waste incineration plant (thermal energy generation).

Basic safety instructions

Adhere to the following basic safety instructions:

- Observe the customary local occupational health and safety regulations for electrical installations.
- Choose a conductor cross-section according to the maximum current load.
- Attach ferrules to flexible wires.

The following equipment features are possible:

	"Gold"	"Premium"
Current	0.25 – 5(32) A	0.25 – 5(32) A
Type code	MIZ-W1TG-K00-10-F50/K	MIZ-W1TG-LMM-10-F50/K
Instantaneous values	Yes	Yes
M-Bus interface	No	Yes
Call-up button	No	Yes
Display lighting	No	Yes

Technical data

Voltage; current	230 V; 0.25 - 5(32) A
Accuracy class	B
Utilisation category	UC 1
Overvoltage category	OVC III (as per EN 62052-31)
Rated peak withstand voltage	4 kV (as per EN 62052-31)
Product standard	EN 50470-3
Frequency	50 Hz
Outputs S0 output	Max. 27 V DC, 27 mA (passive), pulse length 50 ms
M-Bus interface (optional)	As per DIN EN 13757-2, -3 (300...9600 Baud)
Auxiliary power	< 0.4 W
Temperature range	Defined operating range: -25 °C...+55 °C Limit range for storage and transport: -40 °C...+70 °C
Humidity	Maximum 95%, non-condensing, as per EN 62052-11, EN 50470-1 and EN 60068-2-30
Protection class	II
Degree of protection	Housing, connections: IP20
Installation environment	The device may only be used in installation environments with a degree of protection of IP51 (or higher). This ensures protection against penetration by dust and water as specified by the relevant standards (EN 50470-1, EN 62052-31).
Fire properties	As per EN 62052-11
Environmental conditions	Mechanical: M1 according to the Measuring Instruments Directive (2014/32/EU) Electromagnetic: E2 according to the Measuring Instruments Directive (2014/32/EU) Intended operating location: Interior as per EN 50470-1
Weight	Approx. 65 g

Housing, display and control elements

Front view

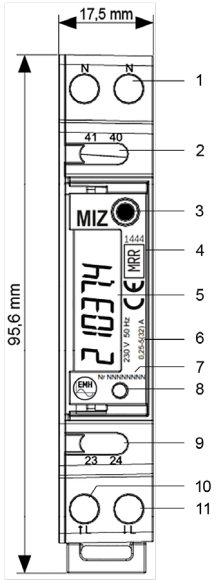

1 - Neutral conductor
2 - S0 output
3 - Call-up button
4 - Conformity and certification marking
5 - Display
6 - Voltage, frequency, current
7 - Serial number
8 - Test LED
9 - M-Bus interface
10 - Power input
11 - Power output

Side view

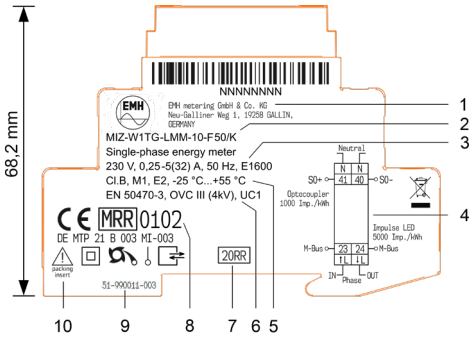

1 - Manufacturer's address
2 - Type designation and type code
3 - Voltage, current, frequency, circuit number
4 - Connection diagram
5 - Accuracy class, temperature class as per EN 60721-3-3
6 - Product standard, overvoltage category (rated peak withstand voltage), utilisation category
7 - Year of construction
8 - Conformity and certification marking
9 - Hardware version
10 - Safety and application information

Display

The display is a liquid crystal display (LCD).

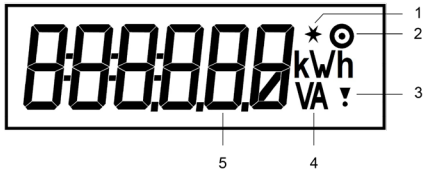

1 - Star symbol: Flashes with the exclamation mark in test mode
2 - Circle symbol: Flashes if communication takes place via the M-Bus interface
3 - Exclamation mark: Flashes if energy direction is negative (return lock, installation monitoring)
4 - Units: Unit of the value displayed in the value area
5 - Value range: Display of tab contents

Display elements

888888	Display test	All display elements flash for 6 s after start-up
UE-100	Firmware version	Appears for 5 s
C50000	Firmware checksum	Appears for 5 s

Alternating display	FF0000	Error status	Appears for 60 s when an error has occurred
	210374	Energy value	Appears for 10 s (for only 2 s when an error has occurred)
	P00008 W	Instantaneous power	Each value appears for 2 s
	U23000 V	Instantaneous voltage	
	I00540 A	Instantaneous current	
	F5000 Hz	Mains frequency	
	PF 1000	Power factor	
	A1 123	Primary M-Bus address	
	A2 1234	Secondary M-Bus address: MSW (most significant word) = 4 highest-value characters	
	A2 5678	LSW (least significant word) = 4 lowest-value characters	
	bd2400	M-Bus baud rate	
	UEr 101	Firmware version	
	888888	Display test	
	GoTESt	Start test mode (call list in standard mode)	
	ESCAPE	End test mode (call list in test mode)	

Error display

If an error is displayed, the meter data must no longer be used for billing, and operation of the device can be affected.
The error code can only be reset at the manufacturer's plant.
If the device is to be used for billing again, it must be put back into service by the manufacturer in accordance with the law on weights and measurements after it has been repaired.

0001	Checksum of firmware is incorrect
0002	Checksum of parametrisation data is incorrect
0003	Checksum of parametrisation data and firmware is incorrect
0004	Checksum of modifiable data is incorrect
0005	Checksum of modifiable data and firmware is incorrect
0006	Checksum of modifiable data and parametrisation data is incorrect
0007	Checksum of modifiable data, parametrisation data and firmware is incorrect

Installation and start-up

The meter can be mounted on TH 35-7.5 cap rails as per IEC 60715.

When connecting the meter, always observe the corresponding connection diagram, which you will find on the housing side of the meter. If there is no connection diagram, please contact your supplier.

DANGER!

Risk of fatal injury in case of contact with live parts!

During installation or when replacing the meter, all conductors connected to the meter must be de-energised.

- Remove the corresponding pre-fuses, on the mains side and on the creation side in case of a two-sided feed.
- Store them in a secure location to ensure that no one else can insert them again without being noticed.
- If you use selective automatic circuit breakers for system disconnection, secure them to prevent them from being switched on again without being noticed.
- Use the specified screw-type terminals only for installation and connection of the meter.

Terminal block

ATTENTION!

Application of excessive torque will damage the connection terminals!

The appropriate torque is dependent on the type of connection line involved and its maximum current.

- Tighten the connection terminals to the corresponding torque as per EN 60999-1.

DANGER!

Improper installation endangers life and health, and can lead to malfunctions and material damage!

- Use an overcurrent protection device rated for a maximum of 32 A upstream of a meter with direct connection.
- The connecting paths must be fuse-protected as per the applicable technical regulations and in accordance with the current specification on the meter's name plate.
- The installer bears responsibility for coordinating the rated values and parameters of the supply-side overcurrent protection devices with the maximum rated currents as well as the rated consumption category of the meter system for directly connected meters.
- The connection cables used to connect a meter must be selected to match the maximum load of the meter and the installation environment in terms of type, cross-section, voltage and temperature.

	Current terminals/ N terminals	Auxiliary terminals
Terminal dimensions d (mm)	4.0	2.5
Minimum connection cross sections (mm²)	0.5	0.5
Maximum connection cross sections (mm²)*	6.0	2.5
Maximum torques (Nm)	1.3	0.5
Screw type	Cross slot combination screw PZ1	Slotted screw
Thread size	M4	M3

* Rated connection capacity based on EN 60999-1

ATTENTION!

Damage to connection terminals and connection screws can occur if electric screwdrivers are used!

When screws are tightened with an electric screwdriver, higher torque peaks can occur than are set by the torque limitation. This can cause damage to the connection terminals and the connection screws.

Meter operation (only for "Premium" version)

Display control

If the call-up button is pressed while the call list is alternating, the meter automatically switches to the display of the energy value, and to the error display if an error has occurred.

The display lighting is activated in the process. If 15 s pass without operation, the lighting switches to half the intensity.

The following rules apply for the further operation of the meter by means of the call-up button:

- Press button for a short time (t ≤ 2 s): Switch to next value
- Press button for a long time (2 s < t ≤ 5 s): Activate a menu item
- Press button for a longer time (t > 5 s): Return to standard display

During normal operation, the meter is in the standard menu. If the display is in a different state, the display automatically returns to the standard display of the standard menu 5 mins after the last time the button was pressed.

Test mode (only for testing and checking purposes)

The register and the test LED are actuated faster by a factor of 10. Test mode can be activated via the "GotESt" menu item in the call list.

Test mode is exited as follows:

- Using the "ESCAPE" menu item in the call list or
- Automatically after 10 s of undervoltage (70% U_{rated}) or
- Automatically after 12 h of operation.

Primary M-Bus address

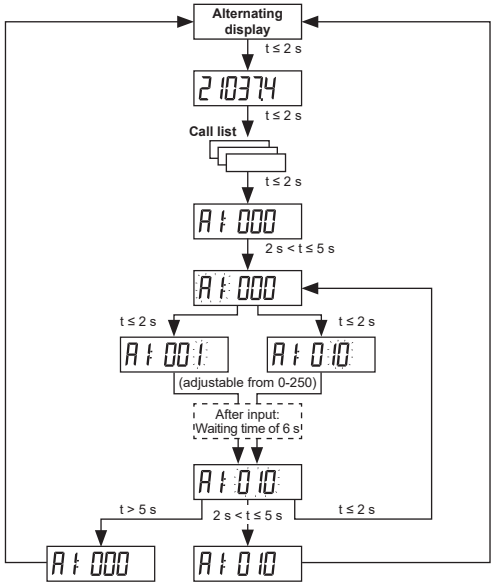

If the call-up button is not operated for 5 min after the primary address has been entered, this address is rejected and the display returns automatically to the standard display.

M-Bus baud rate

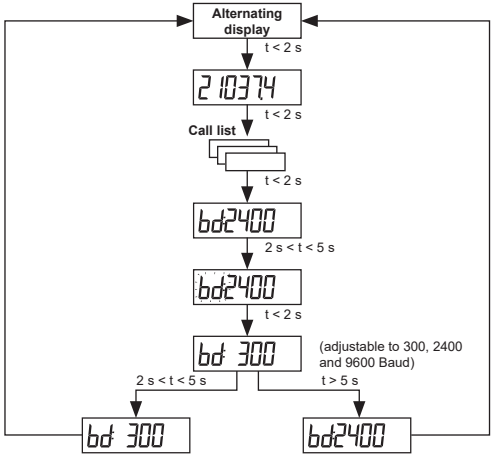

If the call-up button is not operated for 5 min after the primary address has been entered, this address is rejected and the display returns automatically to the standard display.

M-Bus

The following parameters can be transferred via the M-Bus:

- Manufacturer identification
- Medium 2 (electricity)
- Primary and secondary address of the M-Bus
- Energy value
- Instantaneous values (P, U, I), frequency, power factor, operating time
- Error status
- Baud rate

Seal

The housing of the MIZ-... is secured with a manufacturer-specific securing sticker on the underside. The seal cannot be removed without destroying it, so it is possible to tell if the device is opened without authorisation.

Abbreviations

DIN	Deutsches Institut für Normung e.V. (German Standardisation Institute)
EN	European Norm
HP	Unit of division according to DIN 43880
IEC	International Electrotechnical Commission
IP	Ingress Protection
LC	Liquid Crystal
LED	Light emitting diode
S0	Interface as per IEC 62053-31
t	Operation time

EU Declaration of Conformity

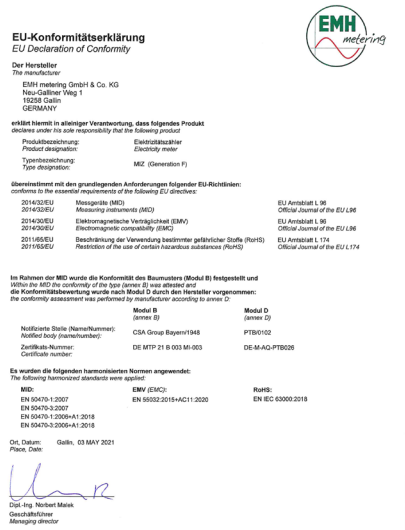

EU-Konformitätserklärung
EU Declaration of Conformity

Der Hersteller
The manufacturer

EMH metering GmbH & Co. KG
Neu-Gallner Weg 1
19258 Gallin
GERMANY

erklärt hiermit in alleiniger Verantwortung, dass folgendes Produkt
declares under his sole responsibility that the following product

Produktbezeichnung: *Product designation:* — Elektrizitätszähler *Electricity meter*

Typenbezeichnung: *Type designation:* — MIZ (Generation F)

übereinstimmt mit den grundlegenden Anforderungen folgender EU-Richtlinien:
conforms to the essential requirements of the following EU directives:

2014/32/EU *2014/32/EU*	Messgeräte (MID) *Measuring instruments (MID)*	EU Amtsblatt L 96 *Official Journal of the EU L96*
2014/30/EU *2014/30/EU*	Elektromagnetische Verträglichkeit (EMV) *Electromagnetic compatibility (EMC)*	EU Amtsblatt L 96 *Official Journal of the EU L96*
2011/65/EU *2011/65/EU*	Beschränkung der Verwendung bestimmter gefährlicher Stoffe (RoHS) *Restriction of the use of certain hazardous substances (RoHS)*	EU Amtsblatt L 174 *Official Journal of the EU L174*

Im Rahmen der MID wurde die Konformität des Baumusters (Modul B) festgestellt und
Within the MID the conformity of the type (annex B) was attested and
die Konformitätsbewertung wurde nach Modul D durch den Hersteller vorgenommen:
the conformity assessment was performed by manufacturer according to annex D:

	Modul B *(annex B)*	Modul D *(annex D)*
Notifizierte Stelle (Name/Nummer): *Notified body (name/number):*	CSA Group Bayern/1948	PTB/0102
Zertifikats-Nummer: *Certificate number:*	DE MTP 21 B 003 MI-003	DE-M-AQ-PTB026

Es wurden die folgenden harmonisierten Normen angewendet:
The following harmonized standards were applied:

MID:	EMV *(EMC):*	RoHS:
EN 50470-1:2007 EN 50470-3:2007 EN 50470-1:2006+A1:2018 EN 50470-3:2006+A1:2018	EN 55032:2015+AC11:2020	EN IEC 63000:2018

Ort, Datum: *Place, Date:* Gallin, 03 MAY 2021

Dipl.-Ing. Norbert Marek
Geschäftsführer
Managing director

You will find the current EU Declaration of Conformity on the internet site www.emh-metering.com in the "Products" area in the product description of the meter.
The specifications for creating the Declaration of Conformity can change at any time, so save the Declaration of Conformity when the device is delivered.